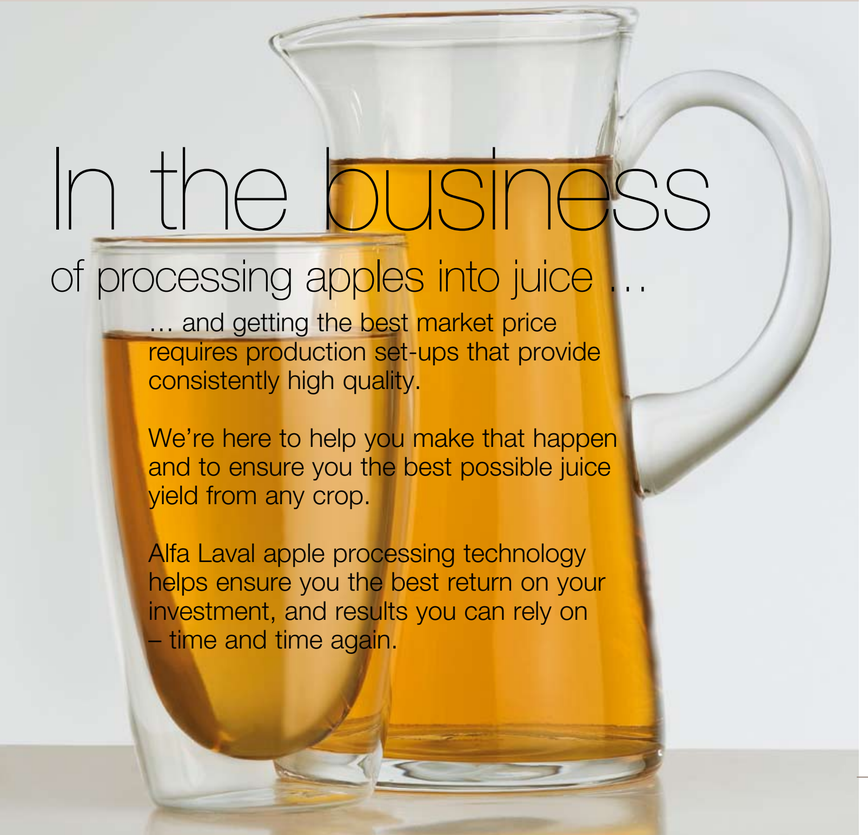

# In the business

## of processing apples into juice …

… and getting the best market price requires production set-ups that provide consistently high quality.

We're here to help you make that happen and to ensure you the best possible juice yield from any crop.

Alfa Laval apple processing technology helps ensure you the best return on your investment, and results you can rely on – time and time again.

**Alfa Laval in brief**

Alfa Laval is a leading global provider of specialized products and engineered solutions. Our equipment, systems and services are dedicated to helping customers to optimize the performance of their processes. Time and time again.

We help our customers to heat, cool, separate and transport products such as oil, water, chemicals, beverages, foodstuffs, starch and pharmaceuticals.

Our worldwide organization works closely with customers in almost 100 countries to help them stay ahead.

**How to contact Alfa Laval**

Up-to-date Alfa Laval contact details for all countries are always available on our website at www.alfalaval.com

PFT00241EN 0612



# Juicy apples

**Alfa Laval solutions for processing apples into juice**

# Global apples

Once upon a time, apples were almost always eaten close to where they were grown. If not eaten, preserved or used in cooking or as animal feed, they were pressed locally – any long-distance transport was impractical.

However, modern advances in processing technology, packaging and transport have gradually transformed this scenario into a global market with juice as a prime feature. And in such a global economy, growers and processors have to be able to deal with both stringent cost margins and high quality requirements at every stage.

Concentrating the juice is a good way to preserve both its quality and value, as well as dealing with the challenges of transport over long distances.

**Mature markets – special parameters**
Processing apples (and pears) – into juice is now a mature industry, where the juice – both clear and cloudy – is a high-volume product traded worldwide as a commodity.

If you want to make sure of getting the best price in such a market, and in the face of global competition, you have to be able to produce apple juice of a consistently high quality.

Alfa Laval equipment, expertise and experience can play a key role in helping you do that, as well as boosting the results you can achieve with your apple processing line. Our resources can also pave the way to also tackling other fruits, if you so wish.

By combining top processing performance, operating reliability and premium quality results, we enable you to make sure of achieving the best juice yield from any crop, with colour, aroma and taste that ensure you the best possible price, whatever current market conditions.

**Consistency counts**
Natural variation in the apples, as well as the effects of climate, weather and transport, means the crops delivered to your plant always have different specifications from one delivery to the next.

Alfa Laval process systems and know-how help you identify and deal with such differences effectively, ensuring you consistent processing results that your business partners can all depend on, right down the supply chain to the consumer.

**Use Alfa Laval equipment in your apple processing set-up to**
- consistently get the most – and the best – out of the apples you process into juice
- achieve maximum versatility, so your company is less vulnerable to fluctuations in the world markets for apple juice
- ensure exceptional plant reliability that results in maximum effective production time
- maintain stringent hygiene management to achieve the best possible quality, and best prices
- make sure your plant is easy to update and extend, to comply with your changing needs.

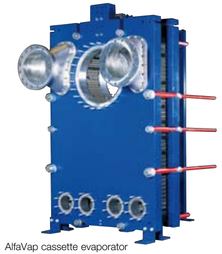

AlfaVap cassette evaporator

**A typical high-quality continuous processing line for apple juice concentrate**

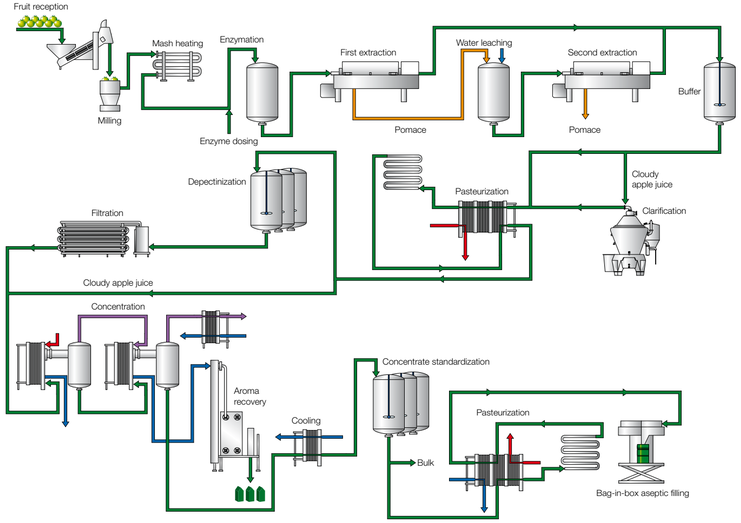


**Clear apple juice**
For rapid, continuous extraction with a particularly high yield, an Alfa Laval Foodec decanter centrifuge – specially developed to meet food and beverage industry requirements – is used in a two-stage extraction process.

This is followed by treatment that removes pectin and starch. The depectinized juice then undergoes clarification in an Alfa Laval membrane filtration system, followed by concentration. This is done using AlfaVap cassette evaporators, at low temperatures and with minimal residence times, to ensure juice of the best quality.

A special Alvac aroma recovery system is used to capture all the aromas.

The apple juice concentrate is normally cooled and stored in bulk. As an alternative it can also be treated in an AlfaTherm pasteurizer prior to aseptic packaging in bag-in-box containers.

**Cloudy apple juice**
After rapid, enclosed extraction, the juice passes to an Alfa Laval disk stack centrifuge to remove any trub that may settle, and to determine the level of solids in the juice. No depectinization or filtration is required.

The decanter extraction system can also be blanketed with nitrogen to completely eliminate any air pick-up that might result in oxidation. This helps ensure cloudy apple juice of the best possible quality.

**Hands-on help**
Configuring new process steps – and upgrading existing ones – involves many different technologies and systems that have to be adjusted and fine-tuned so that they work together perfectly.

We have more than 40 years' experience in meeting the needs of the apple processing industry. These are backed by the benefits of all the R&D resources, materials technology and specialist know-how.

**Doing away with downtime**
We help you avoid unscheduled stoppages and downtime via Alfa Laval Planned Preventative Maintenance agreements, so you can keep your apple processing running non-stop. We also have experts ready to respond quickly and effectively should any glitches occur.

**Alfa Laval can provide complete processing lines for turning apples into high-quality juice, along with all relevant engineering work, if required.**

**Individual items of Alfa Laval equipment for apple processing include**
- Apple mill
- ViscoLine™ tubular heat exchanger
- Mash enzyme treatment tank
- Foodec decanter centrifuge for two-stage extraction
- Depectinization tank
- Alfa Laval disk stack centrifuge
- Alfa Laval ultrafiltration system
- AlfaVap cassette evaporator
- Alvac aroma recovery system
- BaseLine/FrontLine™ plate heat exchanger
- AlfaTherm pasteurizer
- Aseptic bag-in-box filler
- AlCip cleaning module
- Sanitary flow handling and tank cleaning equipment
- Alfa Laval flow control and automation systems.

These are backed by a full range of training and support services.

Foodec hygienic decanter centrifuge